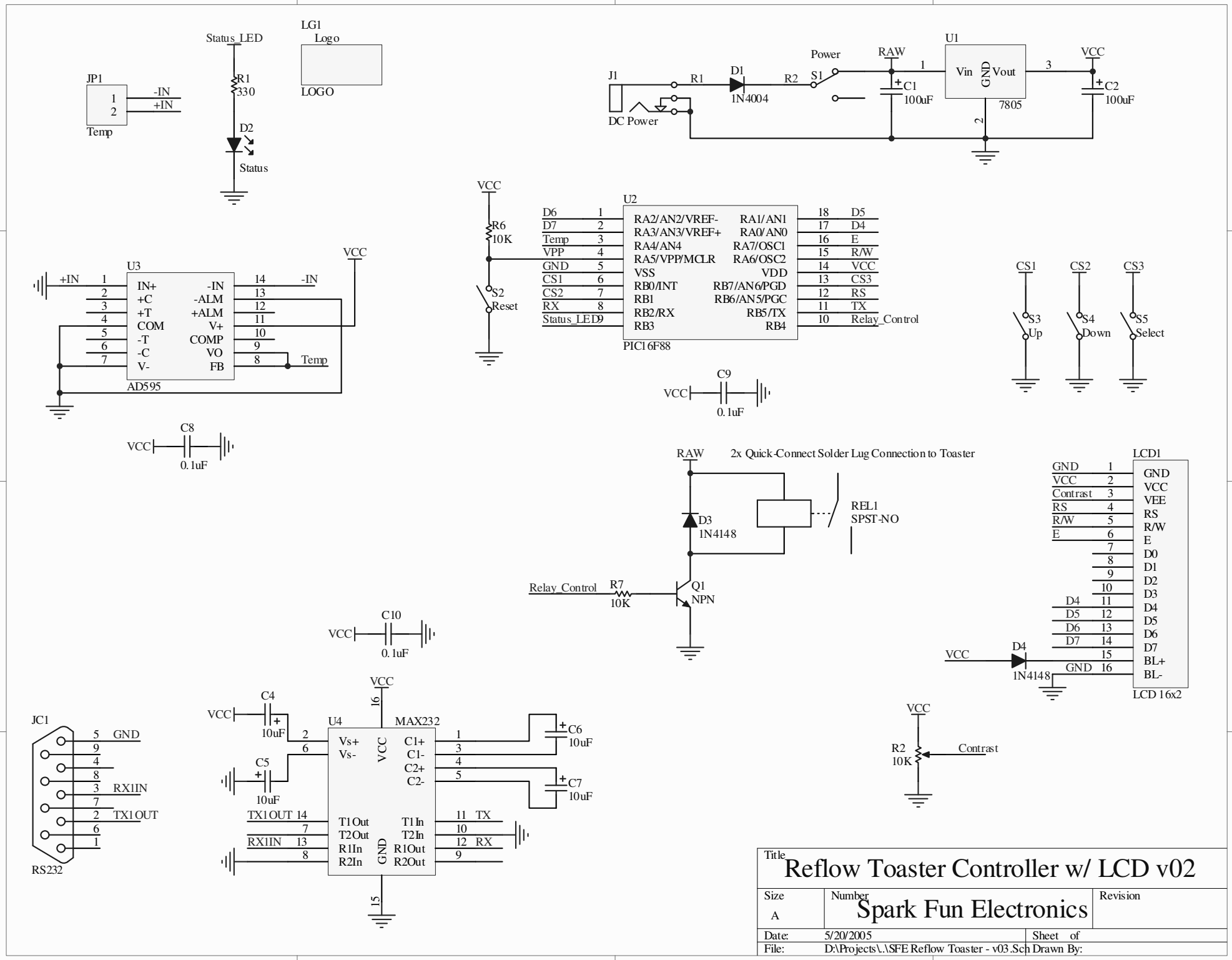
JP1
Temp
-IN
+IN
Status_LED
R1
330
D2
Status
LG1
Logo
LOGO
J1
DC Power
R1
D1
1N4004
R2
S1
Power
RAW
C1
100uF
U1
Vin
GND
Vout
7805
VCC
C2
100uF
VCC
R6
10K
S2
Reset
U2
PIC16F88
D6
D7
Temp
VPP
GND
CS1
CS2
RX
Status_LED
RA2/AN2/VREF-
RA3/AN3/VREF+
RA4/AN4
RA5/VPP/MCLR
VSS
RB0/INT
RB1
RB2/RX
RB3
RA1/AN1
RA0/AN0
RA7/OSC1
RA6/OSC2
VDD
RB7/AN6/PGD
RB6/AN5/PGC
RB5/TX
RB4
D5
D4
E
R/W
VCC
CS3
RS
TX
Relay_Control
CS1
CS2
CS3
S3
Up
S4
Down
S5
Select
U3
AD595
+IN
IN+
+C
+T
COM
-T
-C
V-
-IN
-ALM
+ALM
V+
COMP
VO
FB
Temp
VCC
C9
0.1uF
VCC
C8
0.1uF
RAW
2x Quick-Connect Solder Lug Connection to Toaster
D3
1N4148
REL1
SPST-NO
Relay_Control
R7
10K
Q1
NPN
LCD1
GND
VCC
Contrast
RS
R/W
E
D4
D5
D6
D7
GND
VEE
RS
R/W
E
D0
D1
D2
D3
D4
D5
D6
D7
BL+
BL-
LCD 16x2
VCC
D4
1N4148
VCC
C10
0.1uF
JC1
RS232
GND
RX1IN
TX1OUT
VCC
C4
10uF
C5
10uF
U4
MAX232
Vs+
Vs-
C1+
C1-
C2+
C2-
T1Out
T2Out
R1In
R2In
T1In
T2In
R1Out
R2Out
TX1OUT
RX1IN
TX
RX
C6
10uF
C7
10uF
VCC
R2
10K
Contrast
Title
Reflow Toaster Controller w/ LCD v02
Size
A
Number
Spark Fun Electronics
Revision
Date:
5/20/2005
Sheet of
File:
D:\Projects\..\SFE Reflow Toaster - v03.Sch
Drawn By: